PRESSURE VESSEL DESIGN

DEMISTER SUPPORT RING THICKNESS

INPUT DATA 계산실행

* Description	PES21		* Item No.	E-2007	
* DWG No.	PE-DW-DU-01		* Part No.	E9	
* Vessel I.D	3400	mm	* Design Template	25	oC
* Corrosion Allowance (C.A)	6	mm	* Support Ring Yield stress @ design Temp., sy	21.09	Kg/mm^2
* Demister Pad Diameter (pd)	3400	mm	* Demister Density at Top (G1)	120	Kg/m^3
* Demister Height at Top (H1)	150	mm	* Demister Density at Bottom (G2)	60	Kg/m^3
* Demister Height at Bottom (H2)	150	mm	* Gird material	A240-316	
* Grid Specific Gravity	7.98	g/cm^3	* Grid Thickness	3	mm
* Grid width	25	mm	* Grid Q'ty (GQ)	44	
* Liquid Hold up factor	0.3		* Liquid Gravity(LG)	1	
* Specified unit load,q1	0	Kg/mm^2	* Support Ring width (w)	100	mm
* Support Ring material	A516-70		* Support Ring thickness (T)	13	mm

H-BEAM SIZE

* Support Beam Q'ty	4				
* LENGTH, b	200	mm	* LENGTH, d	200	mm
* THICKNESS, t	8	mm	* THICKNESS, s	12	mm

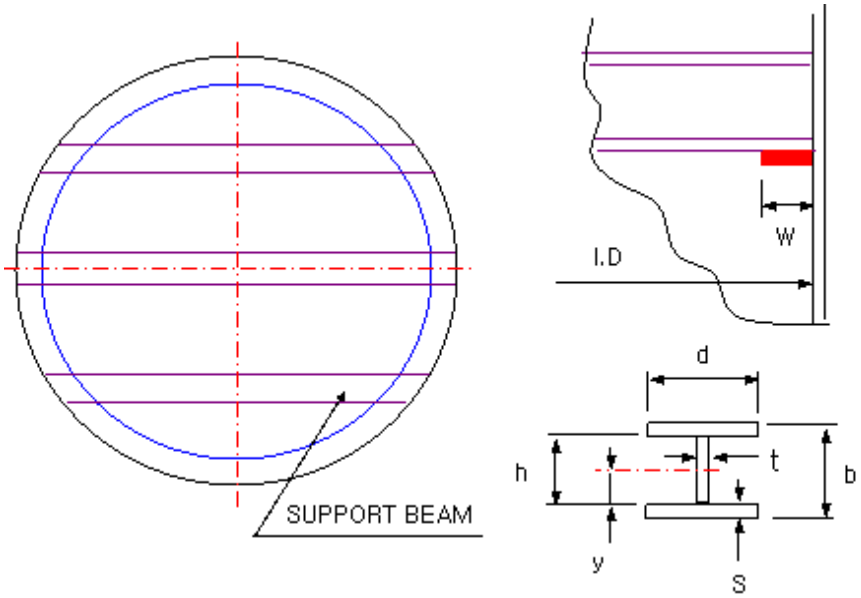

RESULT OF CALCULATION

* H-beam weight	510.3	Kg	* y, Distance from neutral axis to extreme fiber	100.0	mm
* Z, Section modulus, I/y	447,964.9	mm^3	* I, Moment of inertia, ((b*d^3)-h^3*(b-t^3))/12	44,796,491.1	mm^4
* Allowable bending stress, Sba = 0.66sy =	13.9	Kg/mm^2	* Sectional Area (Sa)	9.1	m^2
* Demister weight (dw)	163.5	Kg	* Grid weight (gw)	27.7	Kg
* Liquid weight on load zone (WL)	817.1	Kg	* Total weight on load zone(Wt)	1,518.6	Kg
* Unit load, q2=Wt/Sa	0.00017	Kg/mm^2	* Total required unit load (uw)= q1+q2	0.00017	Kg/mm^2
* Required value, w3=uwxpd	0.568704	Kg/mm	* M=w3xw	56.9	kg-mm/mm
* Required thickness, treq=	10.95	mm	* Judgement	O.K	

MENU PAGE-->>

Copyright ⓒ 2001 피이에스21 All rights reserved.
Please contact E-mail ***pes21@pes21.com***